warranty details

Your Drive brand product is warranted to be free of defects in materials and workmanship for one year from date of purchase.

This device was built to exacting standards and carefully inspected prior to shipment. This warranty is an expression of our confidence in the materials and workmanship of our products and our assurance to the customer.

In the event of a defect covered by this warranty, we will at our option supply parts or replace the device.

This warranty does not cover device failure due to owner misuse or negligence, or normal wear and tear. The warranty does not extend to non-durable components, such as rubber accessories, castors and grips, which are subject to normal wear and need periodic replacement.

If you have any queries or require full warranty conditions, please contact your Drive stockist.

drive
MEDICAL DESIGN & MANUFACTURING

Drive Medical Ltd
Ainley's Industrial Estate, Elland,
West Yorkshire, GB Hx5 9JP
www.drivemedical.co.uk

adjustable height cane seat

Distributor:
DeVilbiss Healthcare GmbH
Kamenzer Straße 3
D-68309 Mannheim
Germany
kontakt@devilbisshc.com •
www.drivedevilbiss-int.com •
Tel: +49 (0) 621 17898-0 •
Fax: +49 (0) 621 17898-111

Manufacturer:
Drive DeVilbiss Healthcare Ltd.
Heathfield Lane
Birkenshaw
West Yorkshire • BD 112 HW
info@drivedevilbiss.co.uk
www.drivedevilbiss.co.uk
Tel.: + (0) 845 0600 333

drive
MEDICAL DESIGN & MANUFACTURING

warranty details

The Drive Cane Seat is a versatile and convenient seating device when open, and a strong support cane when closed. This device is intended for individuals who need to rest when walking a long distance. The three legs with vinyl tips serve as a better walking aid than most canes. It is equipped with a durable plastic seat. Individuals can comfortably hold onto this device using the contoured grip handle.

Height (when folded):	87cm - 97cm (34" - 38")
Height (seat to floor):	48cm - 55cm (19" - 22")
Weight:	1.1kg (2lb 6oz)
Seat diameter:	22cm (8½")
Weight capacity:	115kg (18 stone)

height adjustment

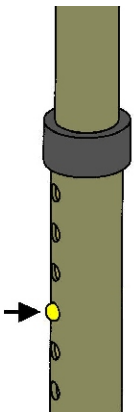

To adjust the leg and seat height:

1. Push in the brass buttons (as shown in the diagram).

2. Extend or retract the leg to the required height.

3. When this height is reached, release the button but carry on adjusting the section until the buttons lock in position.

Ensure all 3 legs are set at the same positions

features

- No assembly required
- Unfolds easily in seconds
- Durable aluminium bronze construction
- Contoured grip handle
- Comfortable plastic seat
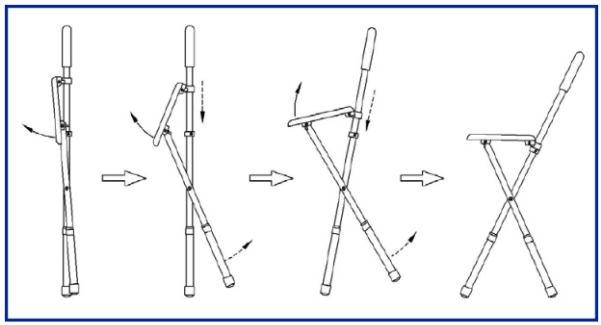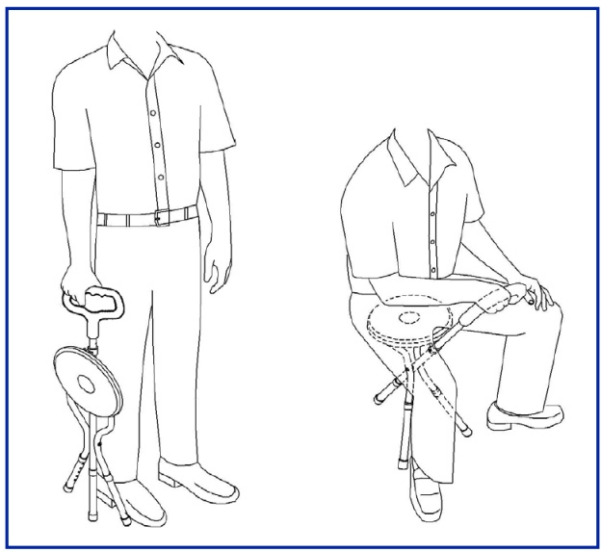
proper sitting procedure